P/N: AMT-ISO-DI4752-18

Technique Specifications

Frequency Range(GHz)	4.7-5.2
Insertion Loss(dB)	0.4 Max.
Isolation(dB)	18 Min.
VSWR	1.3 Max.
Power Rating(W/CW)	100
Reverse Power(W)	50
Connector	Stripline
Direction	Clockwise:1→2
Operating Temp(℃)	-55~+85

Outline Drawing (Size: mm)
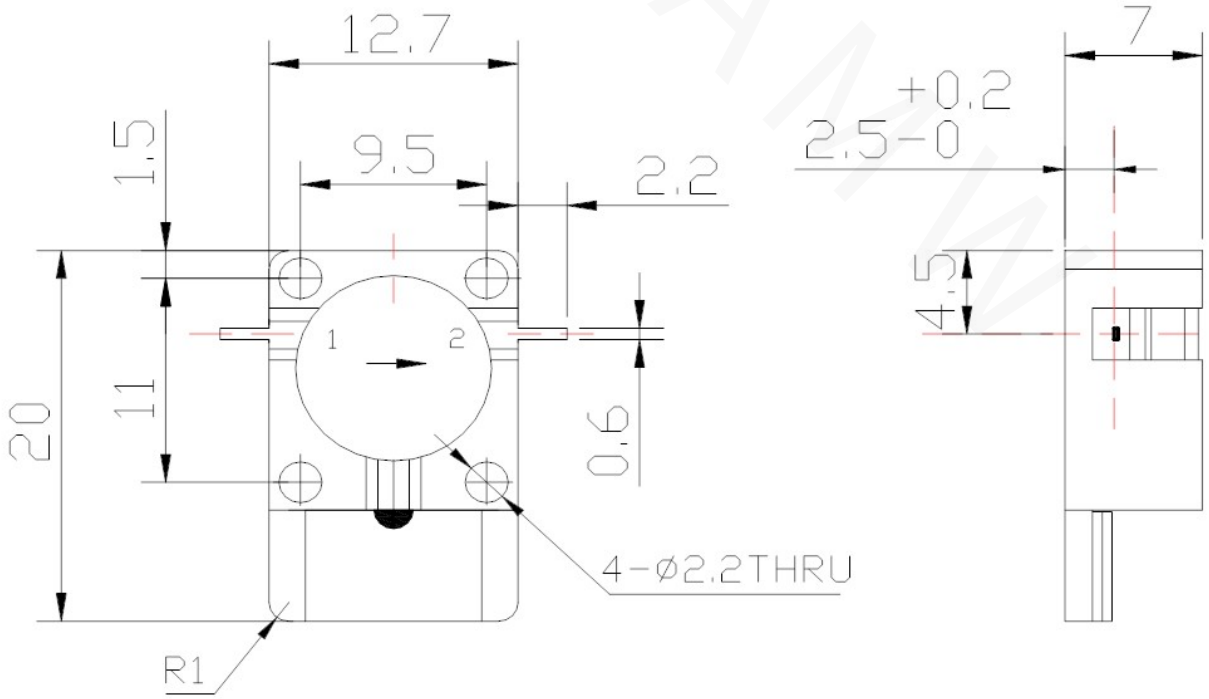
Tolerance: ±0.2mm